PRODUCT	VENUE D-SHOW SIDECAR
DATE	01/01/09
WEIGHT	73 LBS
UNITS	INCH [MM]
SCALE	0.1

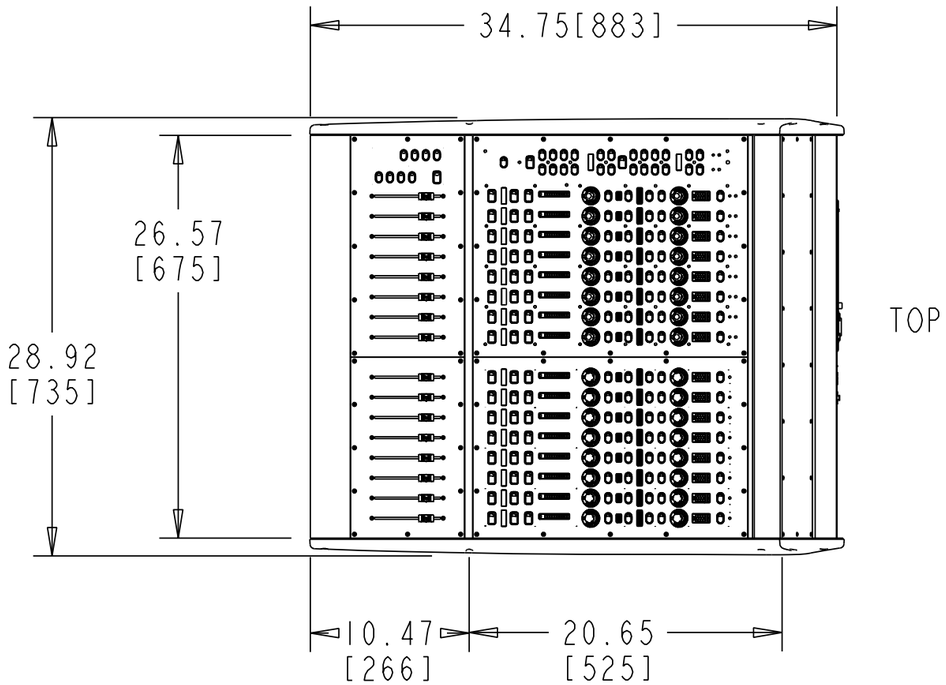

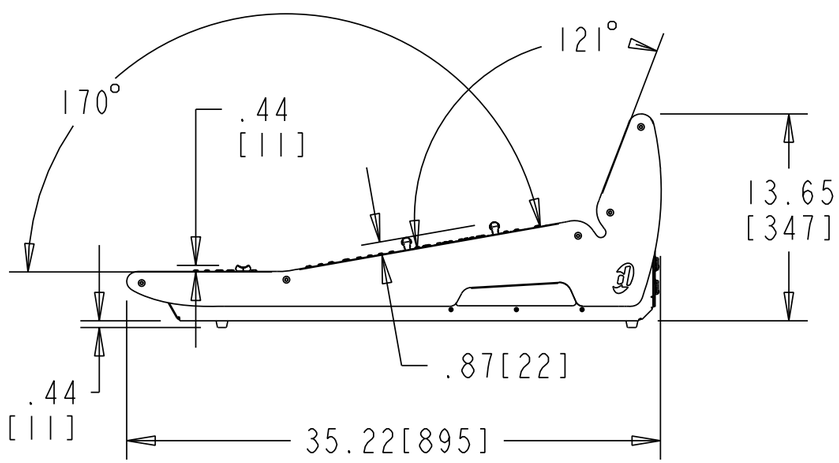

SIDE

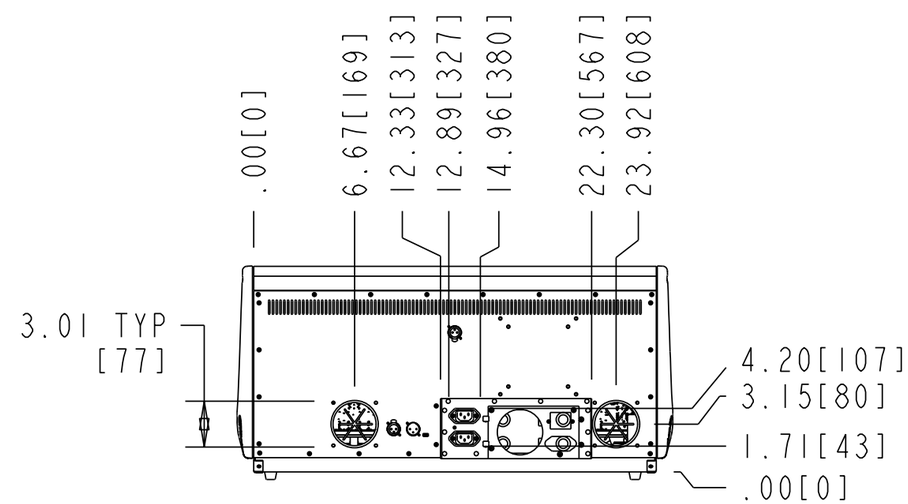

REAR

digidesign
A division of Avid